

SERVICE PUBLICITY

苏州鑫恒鑫电机有限公司

FAN MANUFACTURING EXPERT

FANOVA(SUZHOU) MOTOR TECHNOLOGY CO., LTD

公司简介 COMPANY PROFILE



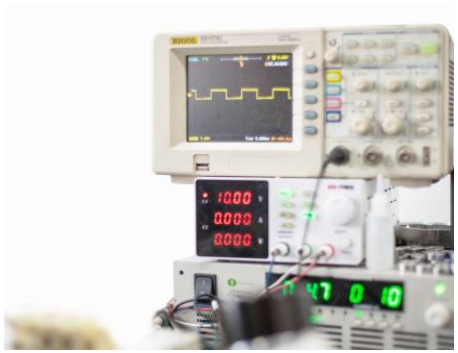











EC-AC Series

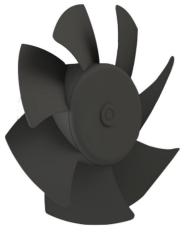

EC Axial Fans D200

– 材料**Material:** 冷轧钢板
风轮**Impeller:** Cold-roll steel sheets
转子 Rotor: 电泳Electrophoresis
端盖 Electronics housing: 压铸铝Die-cast aluminium
– 叶片数量**Number of blades:** 7
– 防护等级**Degree of protection:** IP 44
– 绝缘等级**Insulation class:** B
– 安装位置**Installation position:** 任意Any
– 模式**Mode:**连续工作制 Continuous operation (S1)

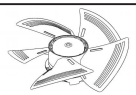	电机 **Motor**	曲线 **Curve**	额定电压 **Nominal Voltage**	额定电压范围 **Nominal Voltage Range**	频率 **Frequency**	电流 **Current**	转速 **Speed**	输入功率 **Max. input Power**
Type			VAC	VAC	Hz	A	RPM	W
FG3G200-2AGN-70	BLEC72	Ⓐ	230	184~270	50/60	0.31	3000	45

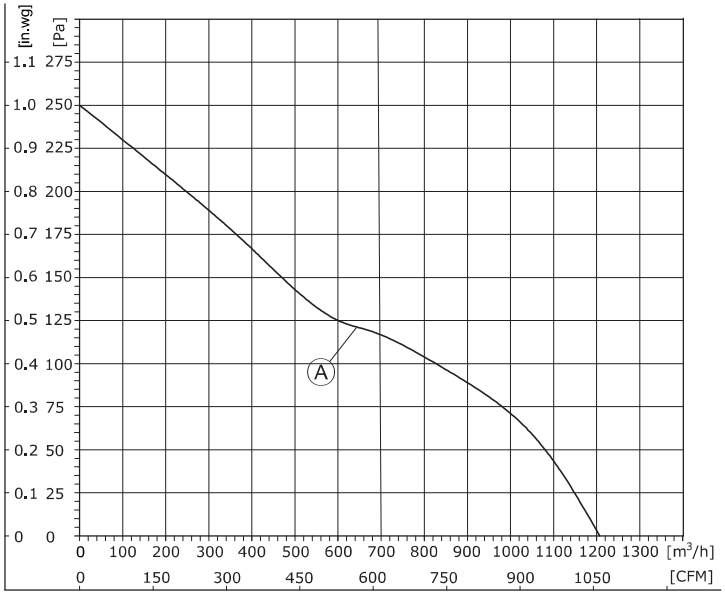

1、Air performance measured according to: ISO 5801, with DJ inlet ring without contact protection.
2、Intake-side sound level: LpA measured at 1 m distance from fan axis. The values given are only applicable under the specifi ed measuring conditions and may differ depending on the installation conditions.

EC Axial Fans D200

– 旋转方向**Direction of rotation:** 反转，从转子方向Anti-clockwise，viewed toward rotor
– 技术特性**Technical features:** 参见附图See connection diagram
– 泄漏电流**Touch curren:** < 3,5 mA
– 能效**Efficiency:** ErP2015
– 标准/证书**Valid For Approval/Standard**：CE,RoHS,ISO9001
环境温度**Perm. ambient temp.**：-25℃~+60℃
– 安装**Mounting:** 免维护滚珠轴承Maintenance-free ball bearings

噪音等级 **Sound Pressure Level**	风量 **Air Flow**	风压 **Air Pressure**		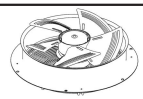	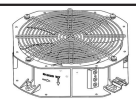	速度控制 **Speed Control**	接线图 **Wiring Mode**
dB(A)	m³/h	Pa	with guard grille	with wall ring	with wall ring(S)		
62	1205	250	FG3G200-2AGL-70	FW3G200-2AGC-70	FW3G200-2AGS-70	0-10VDC PWM	F1

(轴流风机Axial Fan)
FG3G200-2AGN-70

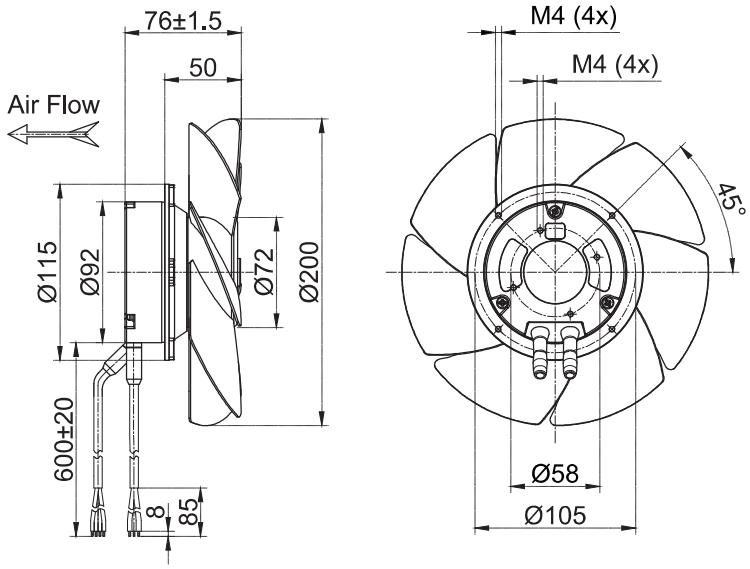

(带网罩的轴流风机Axial Fan With Guard Grille)
FG3G200-2AGL-70

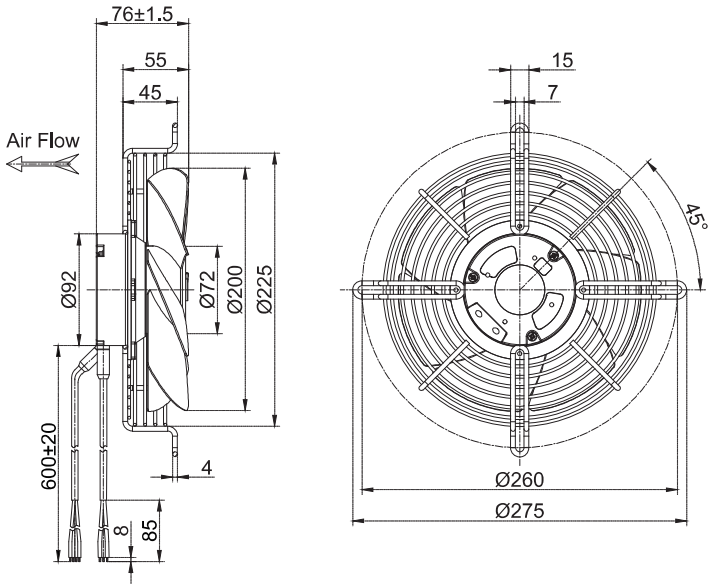

(带导风筒的轴流风机Axial Fan With Wall Ring)
FW3G200-2AGC-70

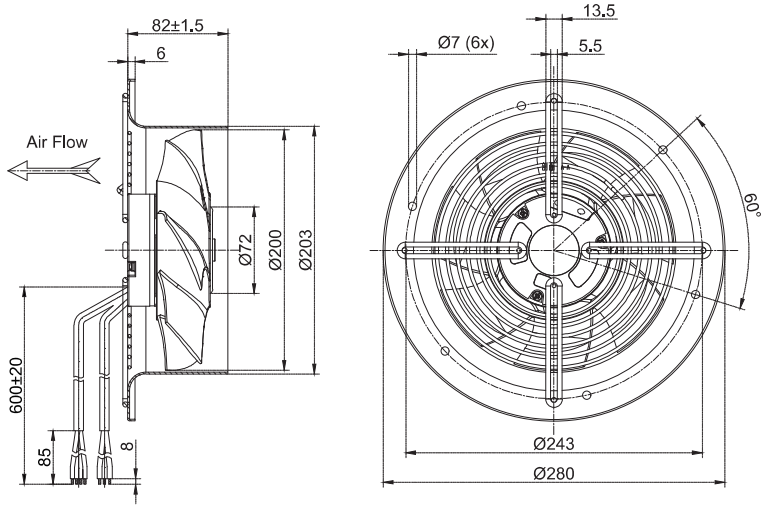

(带导风筒的轴流风机Axial Fan With Wall Ring(S))
FW3G200-2AGS-70

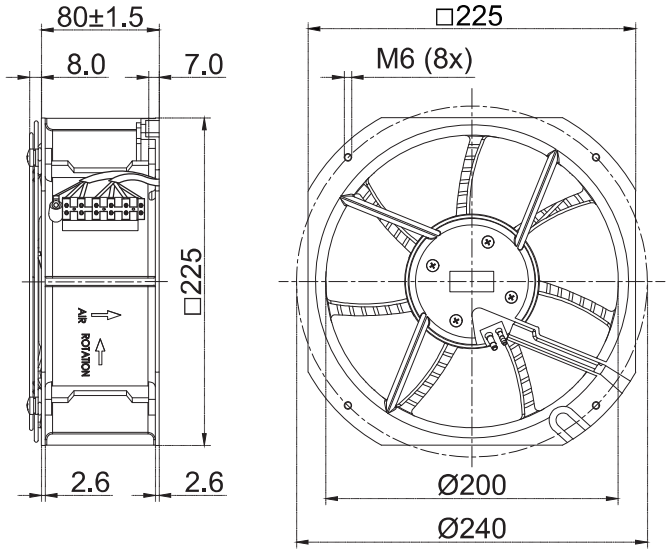



EC Axial Fans D250

- 材料**Material:** 冷轧钢板
  风轮**Impeller:** Cold-roll steel sheets
  转子 Rotor: 电泳Electrophoresis
  端盖 Electronics housing: 压铸铝Die-cast aluminium
- 叶片数量**Number of blades:** 7
- 防护等级**Degree of protection:** IP 44
- 绝缘等级**Insulation class:** B
- 安装位置**Installation position:** 任意Any
- 模式**Mode:**连续工作制 Continuous operation (S1)

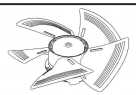	电机 **Motor**	曲线 **Curve**	额定电压 **Nominal Voltage**	额定电压范围 **Nominal Voltage Range**	频率 **Frequency**	电流 **Current**	转速 **Speed**	输入功率 **Max. input Power**
Type			VAC	VAC	Hz	A	RPM	W
FG3G250-2AGN-90	BLEC92	Ⓐ	230	184~270	50/60	0.6	2650	80

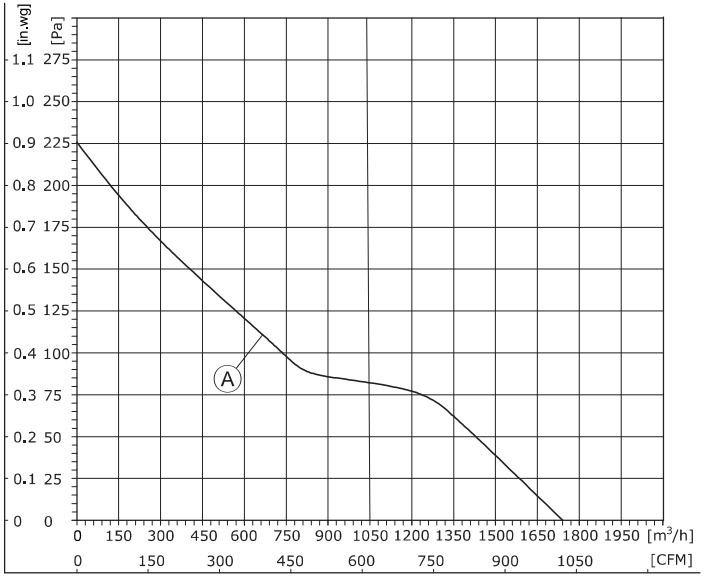

1、Air performance measured according to: ISO 5801, with DJ inlet ring without contact protection.
2、Intake-side sound level: LpA measured at 1 m distance from fan axis. The values given are only applicable under the specifi ed measuring conditions and may differ depending on the installation conditions.

EC Axial Fans D250

- 旋转方向**Direction of rotation:** 反转，从转子方向Anti-clockwise，viewed toward rotor
- 技术特性**Technical features:** 参见附图See connection diagram
- 泄漏电流**Touch curren:** < 3,5 mA
- 能效**Efficiency:** ErP2015
- 标准/证书**Valid For Approval/Standard**：CE,RoHS,ISO9001
  环境温度**Perm. ambient temp.**：**.**-25℃~+60℃
- 安装**Mounting:** 免维护滚珠轴承Maintenance-free ball bearings

噪音等级 **Sound Pressure Level**	风量 **Air Flow**	风压 **Air Pressure**		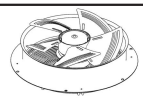	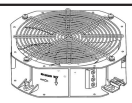	速度控制 **Speed Control**	接线图 **Wiring Mode**
dB(A)	m³/h	Pa	with guard grille	with wall ring	with wall ring(S)		
61	1740	226	FG3G250-2AGL-90	FW3G250-2AGC-90	FW3G250-2AGS-90	0-10VDC PWM RS-485	F2

(轴流风机Axial Fan)
FG3G250-2AGN-90

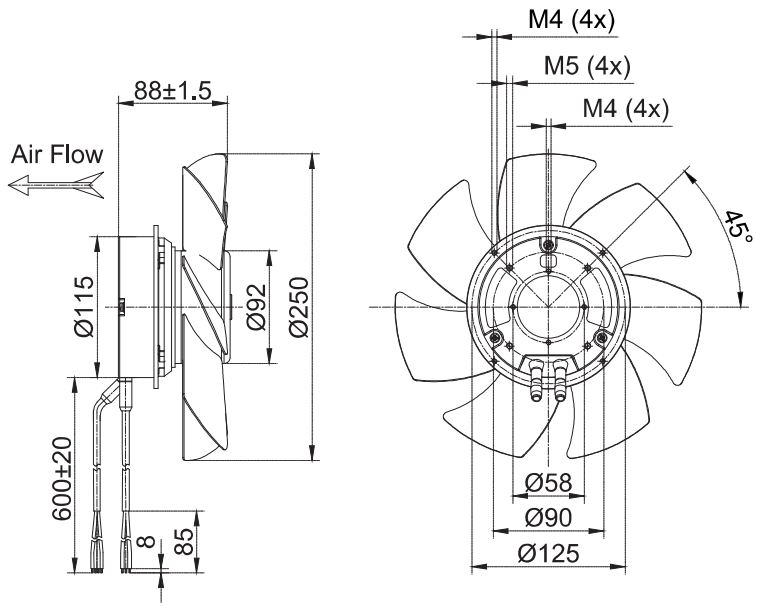

(带网罩的轴流风机Axial Fan With Guard Grille)
FG3G250-2AGL-90

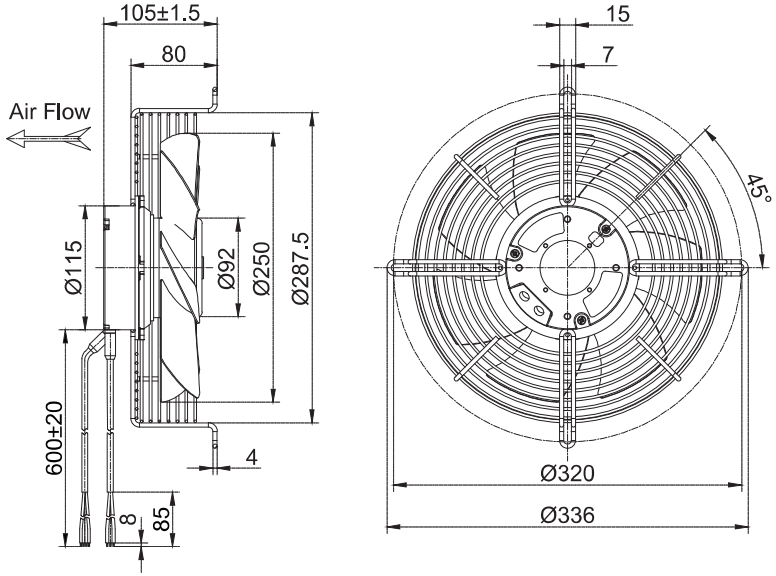

(带导风筒的轴流风机Axial Fan With Wall Ring)
FW3G250-2AGC-90

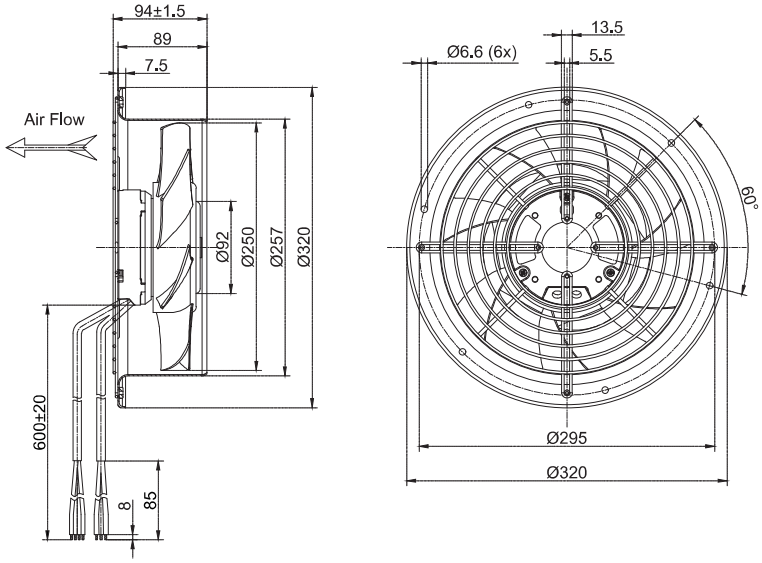

(带导风筒的轴流风机Axial Fan With Wall Ring（S）)
FW3G250-2AGS-90

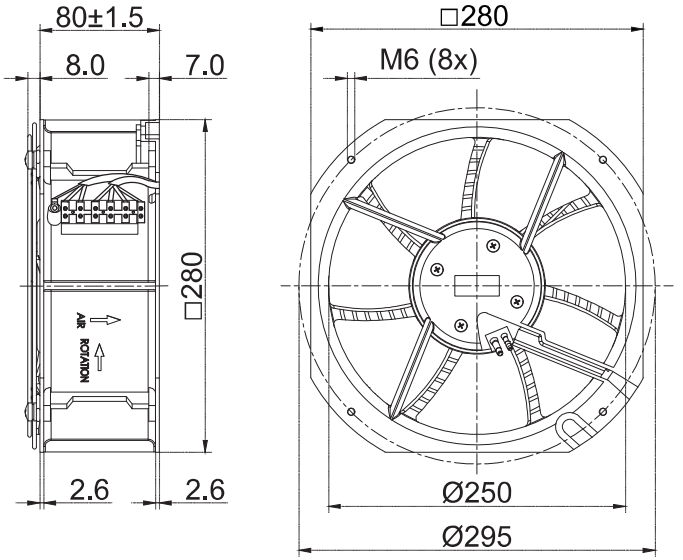



EC Axial Fans D300

– 材料**Material:** 塑料
风轮**Impeller:** Plastic
转子 Rotor: 电泳**E**lectrophoresis
端盖 Electronics housing: 压铸铝Die-cast aluminium
– 叶片数量**Number of blades:** 5
– 防护等级**Degree of protection:** IP 44
– 绝缘等级**Insulation class:** B
– 安装位置**Installation position:** 任意Any
– 模式**Mode:**连续工作制 Continuous operation (S1)

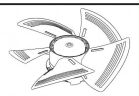	电机 **Motor**	曲线 **Curve**	额定电压 **Nominal Voltage**	额定电压范围 **Nominal Voltage Range**	频率 **Frequency**	电流 **Current**	转速 **Speed**	输入功率 **Max. input Power**
Type			VAC	VAC	Hz	A	RPM	W
FG3G300-2APN-90	BLEC92	Ⓐ	230	184~270	50/60	1.35	2300	170

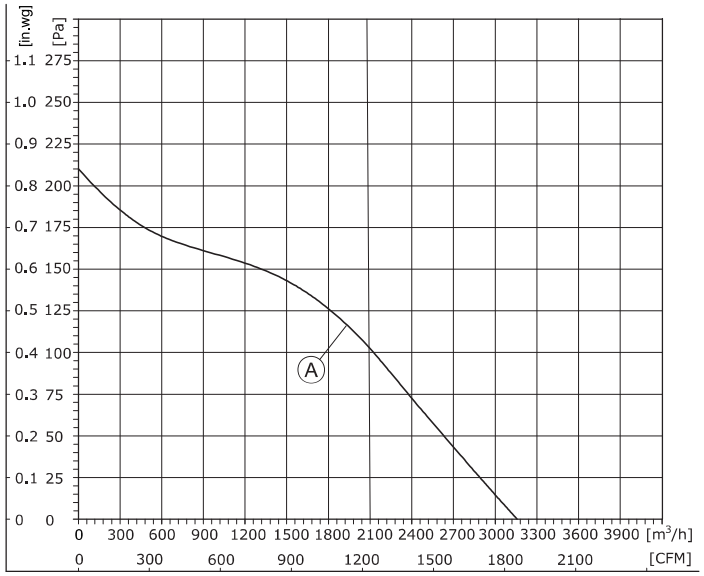

1、Air performance measured according to: ISO 5801, with DJ inlet ring without contact protection.
2、Intake-side sound level: LpA measured at 1 m distance from fan axis. The values given are only applicable under the specifi ed measuring conditions and may differ depending on the installation conditions.

EC Axial Fans D300

– 旋转方向**Direction of rotation:** 反转，从转子方向Anti-clockwise，viewed toward rotor
– 技术特性**Technical features:** 参见附图See connection diagram
– 泄漏电流**Touch curren:** < 3,5 mA
– 能效**Efficiency:** ErP2015
– 标准/证书**Valid For Approval/Standard**：CE,RoHS,ISO9001
环境温度**Perm. ambient temp.**：**.**-25℃~+60℃
– 安装**Mounting:** 免维护滚珠轴承Maintenance-free ball bearings

噪音等级 **Sound Pressure Level**	风量 **Air Flow**	风压 **Air Pressure**		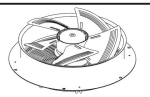	速度控制 **Speed Control**	接线图 **Wiring Mode**
dB(A)	m³/h	Pa	with guard grille	with wall ring		
64	3160	210	FG3G300-2APL-90	FW3G300-2APC-90	0-10VDC PWM RS-485	F2

(轴流风机Axial Fan)
FG3G300-2APN-90

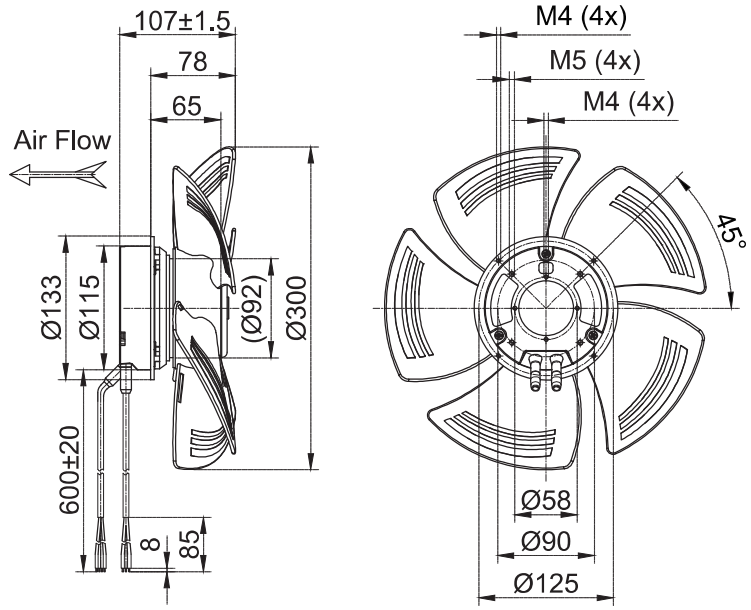

(带网罩的轴流风机Axial Fan With Guard Grille)
FG3G300-2APL-90

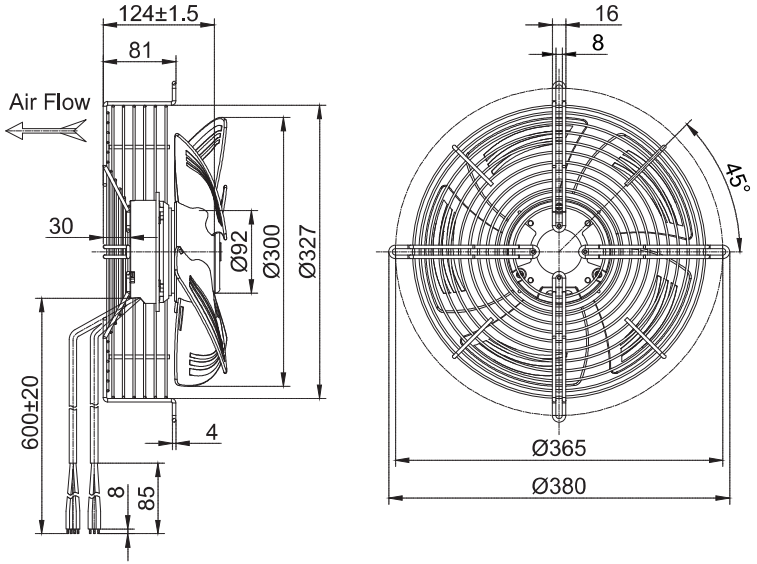

(带导风筒的轴流风机Axial Fan With Wall Ring)
FW3G300-2APC-90

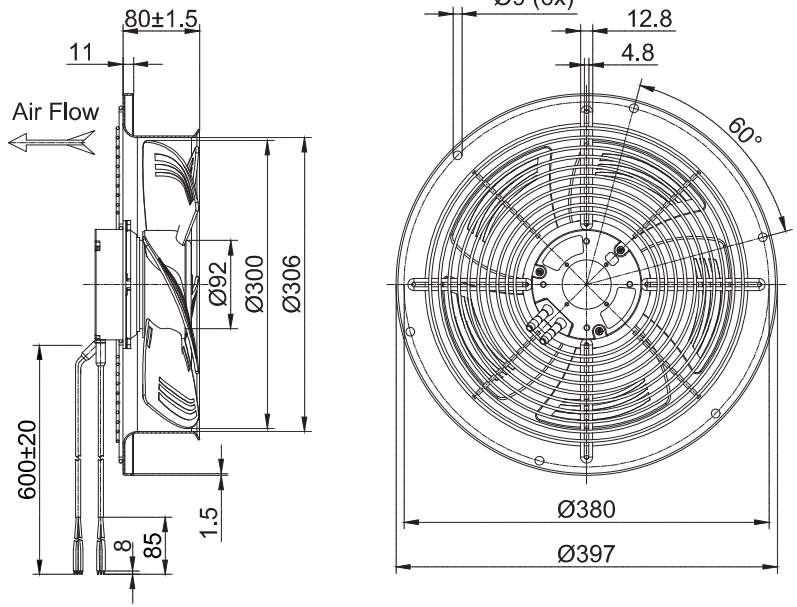



EC Axial Fans D350

– 材料**Material:** 塑料
风轮**Impeller:** Plastic
转子 Rotor: 电泳Electrophoresis
端盖 Electronics housing: 压铸铝Die-cast aluminium
– 叶片数量**Number of blades:** 5
– 防护等级**Degree of protection:** IP 44/54
– 绝缘等级**Insulation class:** B
– 安装位置**Installation position:** 任意Any
– 模式**Mode:**连续工作制 Continuous operation (S1)

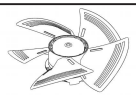	电机 **Motor**	曲线 **Curve**	额定电压 **Nominal Voltage**	额定电压范围 **Nominal Voltage Range**	频率 **Frequency**	电流 **Current**	转速 **Speed**	输入功率 **Max. input Power**
Type			VAC	VAC	Hz	A	RPM	W
FG3G350-2APN-90	BLEC92	Ⓐ	230	184~270	50/60	1.15	1580	160
FG3G350-2APN-20	BLEC102	Ⓑ	230	184~270	50/60	2.0	2000	460

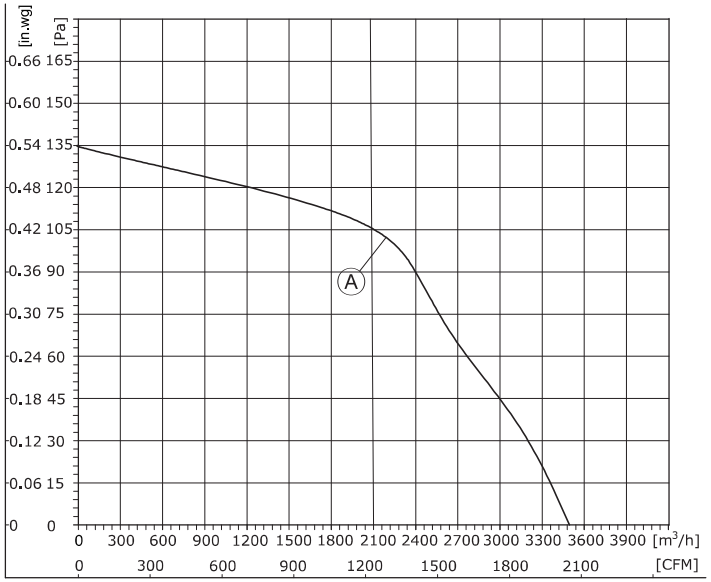

1、Air performance measured according to: ISO 5801, with DJ inlet ring without contact protection.
2、Intake-side sound level: LpA measured at 1 m distance from fan axis. The values given are only applicable under the specifi ed measuring conditions and may differ depending on the installation conditions.

EC Axial Fans D350

– 旋转方向**Direction of rotation:** 反转，从转子方向Anti-clockwise，viewed toward rotor
– 技术特性**Technical features:** 参见附图See connection diagram
– 泄漏电流**Touch curren:** < 3,5 mA
– 能效**Efficiency:** ErP2015
– 标准/证书**Valid For Approval/Standard**：CE,RoHS,ISO9001
环境温度**Perm. ambient temp.**：.-25℃~+60℃
– 安装**Mounting:** 免维护滚珠轴承Maintenance-free ball bearings

噪音等级 **Sound Pressure Level**	风量 **Air Flow**	风压 **Air Pressure**		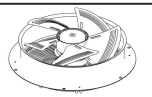	速度控制 **Speed Control**	接线图 **Wiring Mode**
dB(A)	m³/h	Pa	with guard grille	with wall ring		
63	3500	135	FG3G350-2APL-90	FW3G350-2APC-90	0-10VDC PWM RS-485	F2
80	4650	275	FG3G350-2APL-20	FW3G350-2APC-20		F3,F5

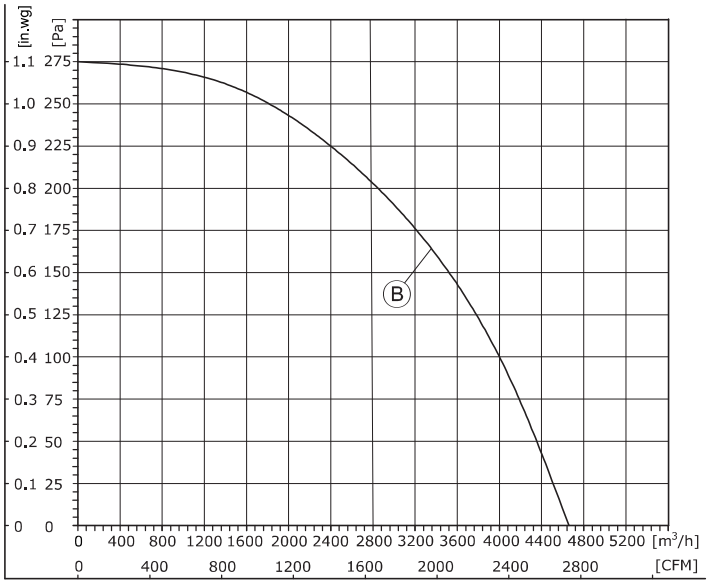

1、Air performance measured according to: ISO 5801, with DJ inlet ring without contact protection.
2、Intake-side sound level: LpA measured at 1 m distance from fan axis. The values given are only applicable under the specifi ed measuring conditions and may differ depending on the installation conditions.

(轴流风机Axial Fan)
FG3G350-2APN-90

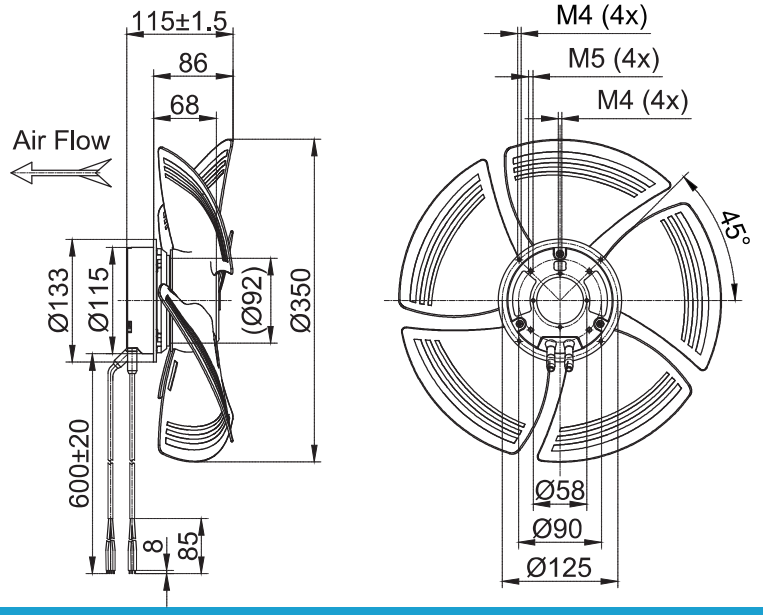

(带网罩的轴流风机Axial Fan With Guard Grille)
FG3G350-2APL-90

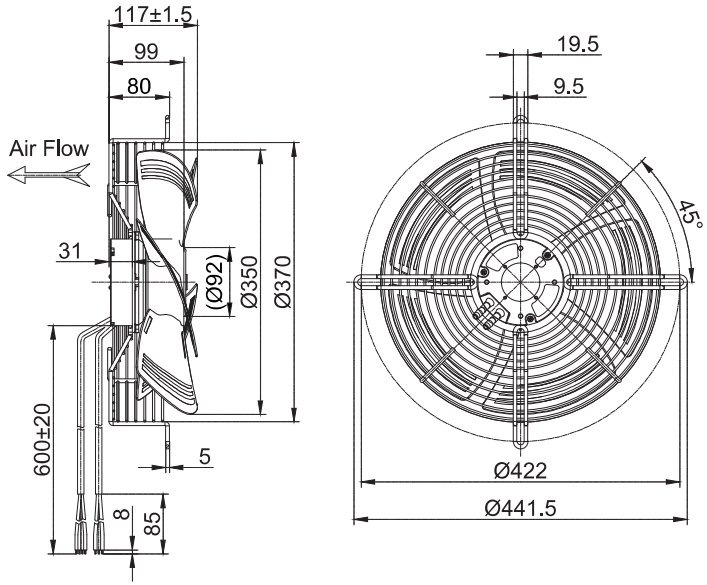

(带导风筒的轴流风机Axial Fan With Wall Ring)
FW3G350-2APC-90

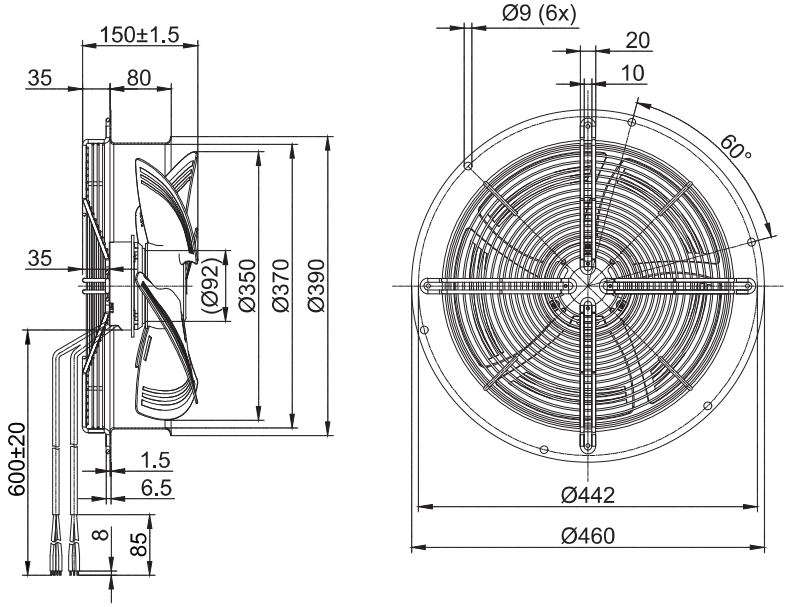

(轴流风机Axial Fan)
FG3G350-2APN-20

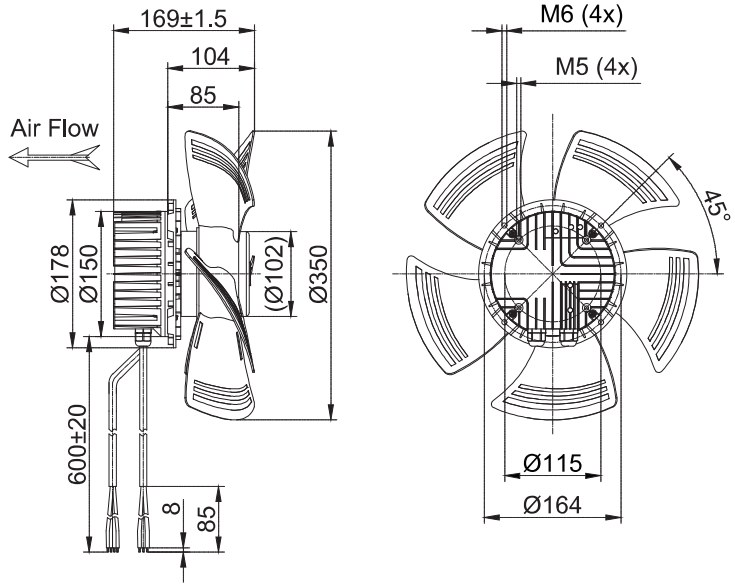

(带网罩的轴流风机Axial Fan With Guard Grille)
FG3G350-2APL-20

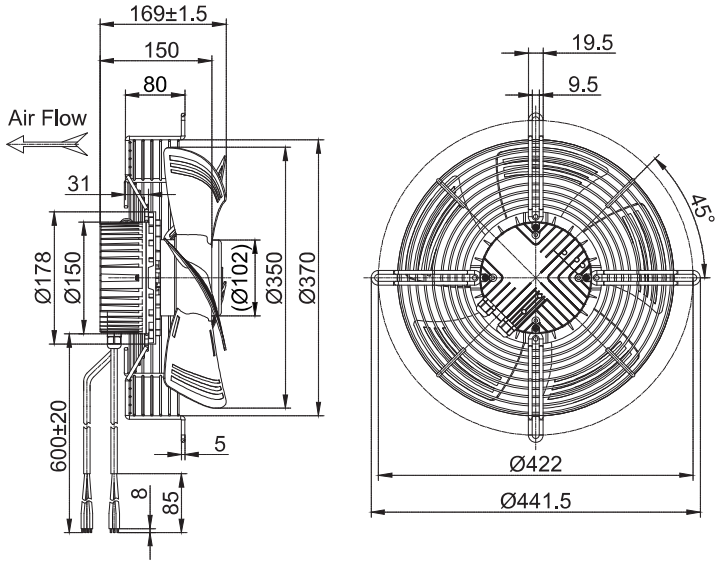

(带导风筒的轴流风机Axial Fan With Wall Ring)
FW3G350-2APC-20

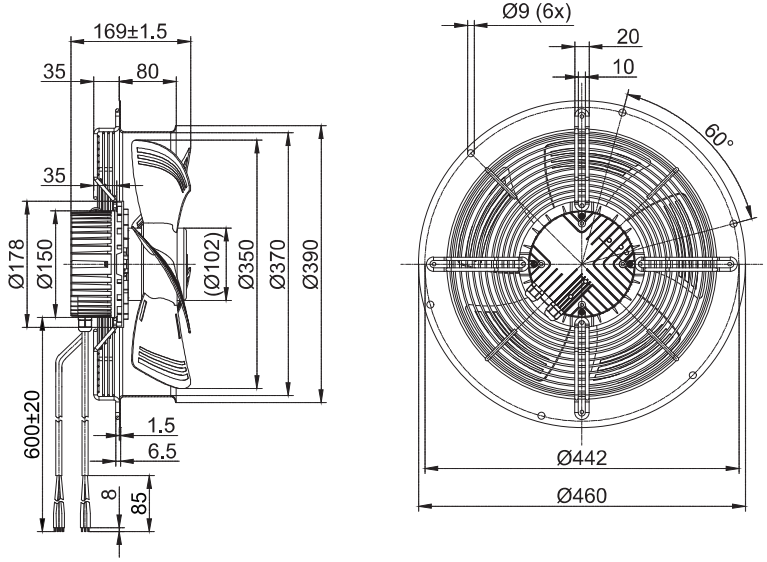

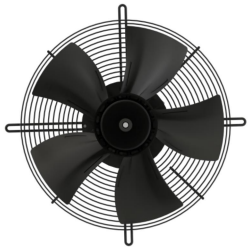

EC Axial Fans D400

– 材料**Material:** 塑料
风轮**Impeller:** Plastic
转子 Rotor: 电泳Electrophoresis
端盖 Electronics housing: 压铸铝Die-cast aluminium
– 叶片数量**Number of blades:** 5
– 防护等级**Degree of protection:** IP 54
– 绝缘等级**Insulation class:** B
– 安装位置**Installation position:** 任意Any
– 模式**Mode:**连续工作制 Continuous operation (S1)

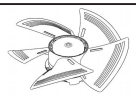	电机 **Motor**	曲线 **Curve**	额定电压 **Nominal Voltage**	额定电压范围 **Nominal Voltage Range**	频率 **Frequency**	电流 **Current**	转速 **Speed**	输入功率 **Max. input Power**
Type			VAC	VAC	Hz	A	RPM	W
FG3G400-2APN-20	BLEC102	Ⓐ	230	184~270	50/60	2.18	1760	500

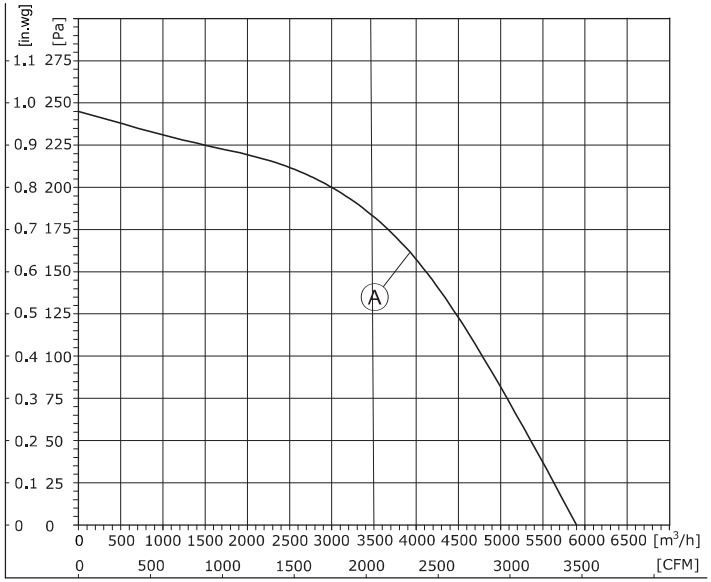

1、Air performance measured according to: ISO 5801, with DJ inlet ring without contact protection.
2、Intake-side sound level: LpA measured at 1 m distance from fan axis. The values given are only applicable under the specifi ed measuring conditions and may differ depending on the installation conditions.

EC Axial Fans D400

– 旋转方向**Direction of rotation:** 反转，从转子方向Anti-clockwise，viewed toward rotor
– 技术特性**Technical features:** 参见附图See connection diagram
– 泄漏电流**Touch curren:** < 3,5 mA
– 能效**Efficiency:** ErP2015
– 标准/证书**Valid For Approval/Standard**：CE,RoHS,ISO9001
环境温度**Perm. ambient temp.**：-25℃~+60℃
– 安装**Mounting:** 免维护滚珠轴承Maintenance-free ball bearings

噪音等级 **Sound Pressure Level**	风量 **Air Flow**	风压 **Air Pressure**	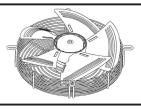	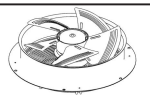	速度控制 **Speed Control**	接线图 **Wiring Mode**
dB(A)	m³/h	Pa	with guard grille	with wall ring		
79	5900	240	FG3G400-2APL-20	FW3G400-2APF-20	0-10VDC PWM RS-485	F3,F5

(轴流风机Axial Fan)
FG3G400-2APN-20

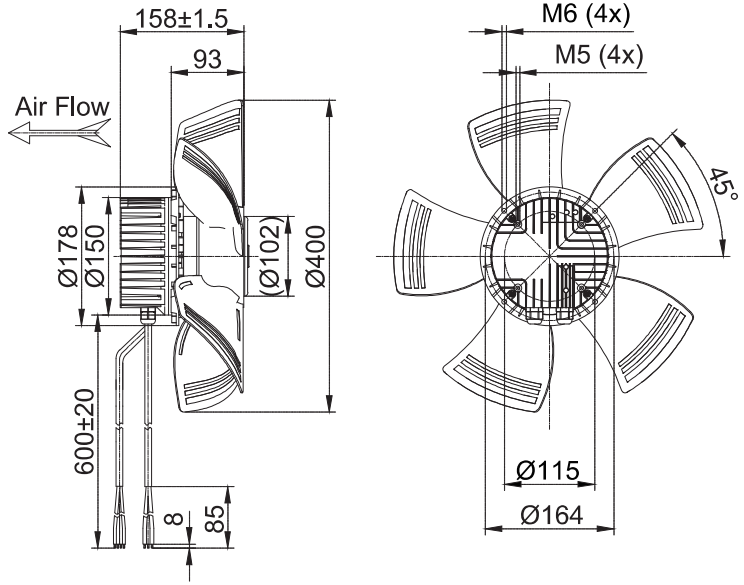

(带网罩的轴流风机Axial Fan With Guard Grille)
FG3G400-2APL-20

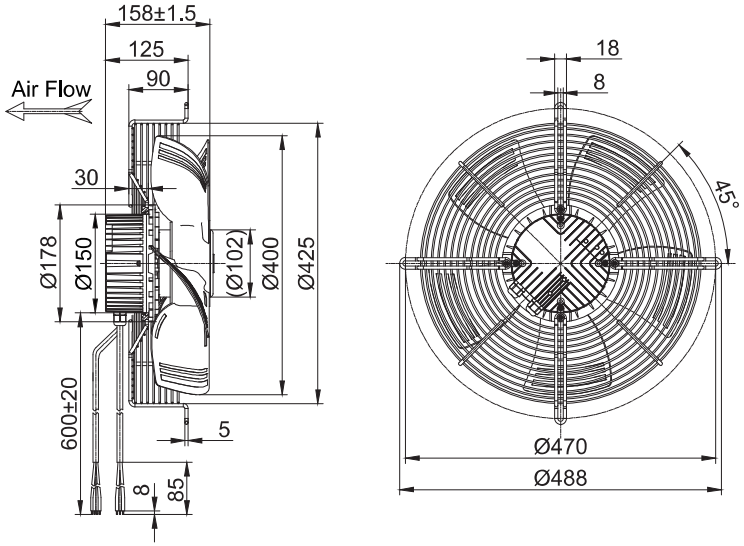

(带导风筒的轴流风机Axial Fan With Wall Ring)
FW3G400-2APF-20

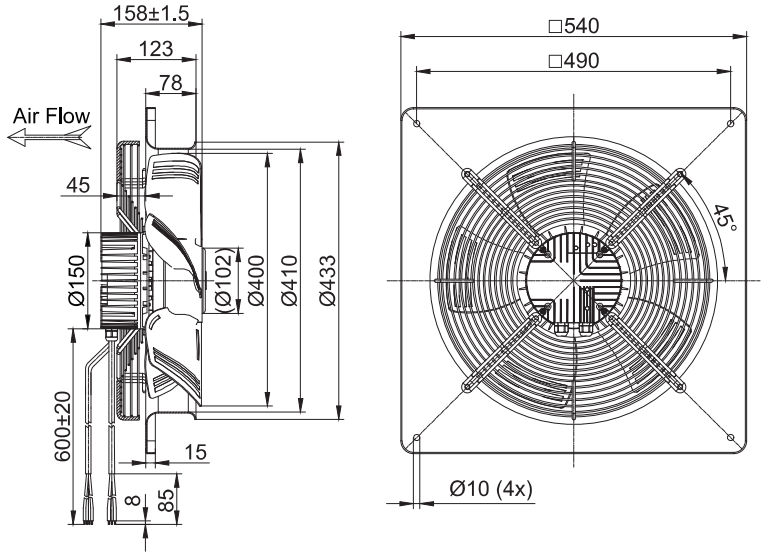

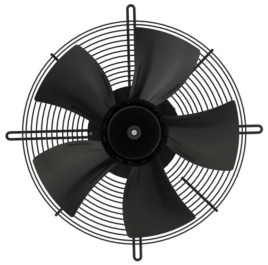

EC Axial Fans D450

- 材料**Material:** 塑料
  风轮**Impeller:** Plastic
  转子 Rotor: 电泳Electrophoresis
  端盖 Electronics housing: 压铸铝Die-cast aluminium
- 叶片数量**Number of blades:** 5
- 防护等级**Degree of protection:** IP 54
- 绝缘等级**Insulation class:** B
- 安装位置**Installation position:** 任意Any
- 模式**Mode:**连续工作制 Continuous operation (S1)

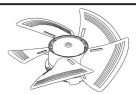	电机 **Motor**	曲线 **Curve**	额定电压 **Nominal Voltage**	额定电压范围 **Nominal Voltage Range**	频率 **Frequency**	电流 **Current**	转速 **Speed**	输入功率 **Max. input Power**
Type			VAC	VAC	Hz	A	RPM	W
FG3G450-2APN-20	BLEC102	Ⓐ	230	184~270	50/60	1.9	1600	420

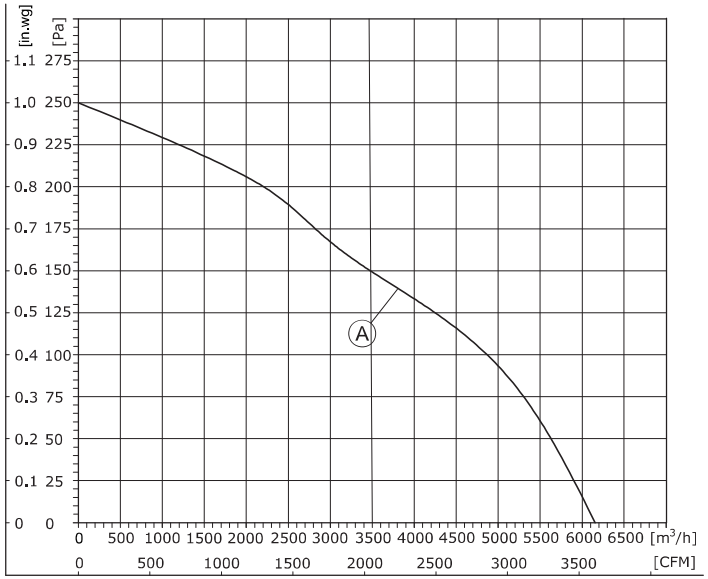

1、Air performance measured according to: ISO 5801, with DJ inlet ring without contact protection.
2、Intake-side sound level: LpA measured at 1 m distance from fan axis. The values given are only applicable under the specifi ed measuring conditions and may differ depending on the installation conditions.

EC Axial Fans D450

- 旋转方向**Direction of rotation:** 反转，从转子方向Anti-clockwise，viewed toward rotor
- 技术特性**Technical features:** 参见附图See connection diagram
- 泄漏电流**Touch curren:** < 3,5 mA
- 能效**Efficiency:** ErP2015
- 标准/证书**Valid For Approval/Standard**：CE,RoHS,ISO9001
  环境温度**Perm. ambient temp.**：.-25℃~+60℃
- 安装**Mounting:** 免维护滚珠轴承Maintenance-free ball bearings

噪音等级 **Sound Pressure Level**	风量 **Air Flow**	风压 **Air Pressure**		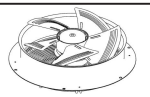	速度控制 **Speed Control**	接线图 **Wiring Mode**
dB(A)	m³/h	Pa	with guard grille	with wall ring		
68	6150	250	FG3G450-2APL-20	FW3G450-2APF-20	0-10VDC PWM RS-485	F3,F5

(轴流风机Axial Fan)
FG3G450-2APN-20

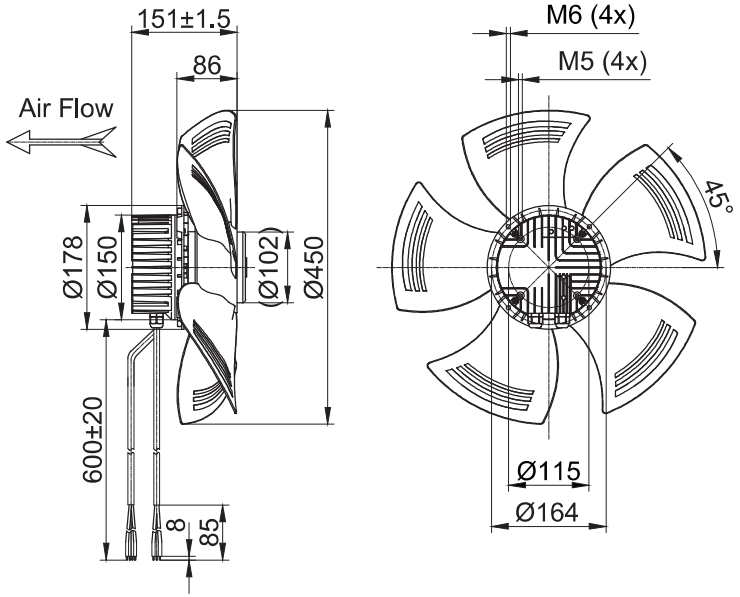

(带网罩的轴流风机Axial Fan With Guard Grille)
FG3G450-2APL-20

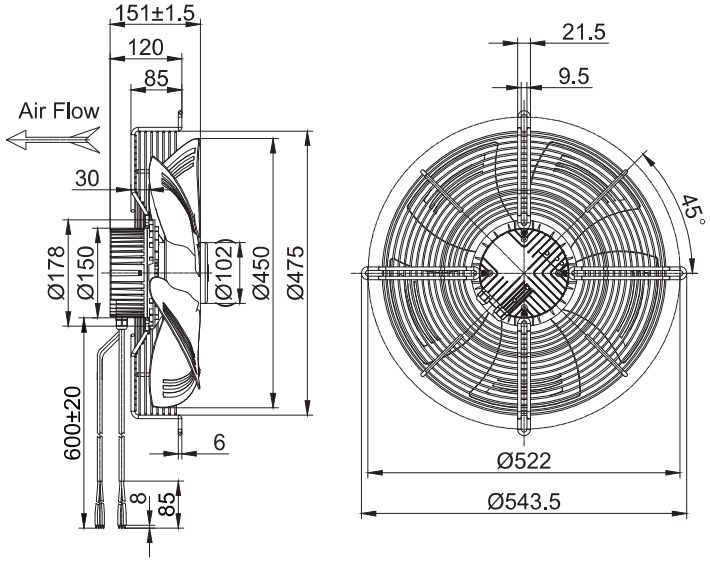

(带导风筒的轴流风机Axial Fan With Wall Ring)
FW3G450-2APF-20

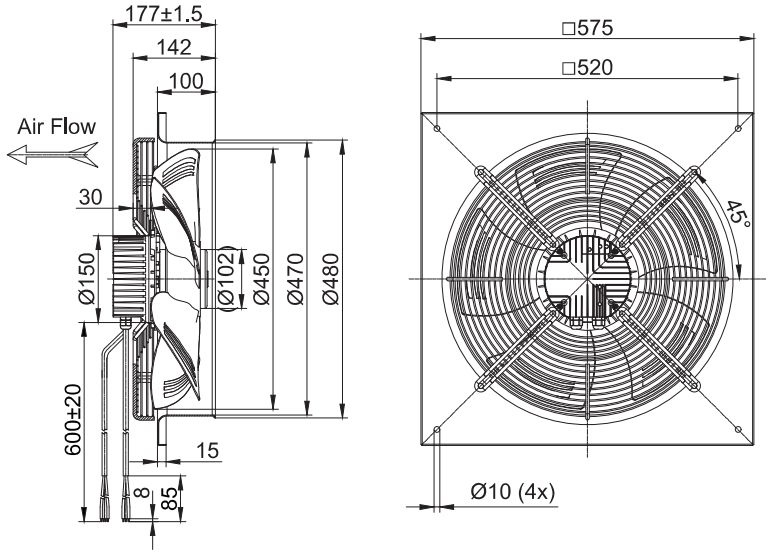



EC Axial Fans D500

– 材料**Material:** 塑料
风轮**Impeller:** Plastic
转子 Rotor: 电泳Electrophoresis
端盖 Electronics housing: 压铸铝Die-cast aluminium
– 叶片数量**Number of blades:** 5
– 防护等级**Degree of protection:** IP 54
– 绝缘等级**Insulation class:** B/F
– 安装位置**Installation position:** 任意Any
– 模式**Mode:**连续工作制 Continuous operation (S1)

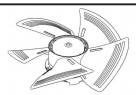	电机 **Motor**	曲线 **Curve**	额定电压 **Nominal Voltage**	额定电压范围 **Nominal Voltage Range**	频率 **Frequency**	电流 **Current**	转速 **Speed**	输入功率 **Max. input Power**
Type			VAC	VAC	Hz	A	RPM	W
FG3G500-2APN-20	BLEC102	Ⓐ	230	184~270	50/60	2.0	1250	450
FG3G500-2APN-30	BLEC137	Ⓑ	230	184~270	50/60	3.1	1550	700
FG3G500-4APN-31	BLEC137	Ⓒ	380	304~456	50/60	1.5	1680	850

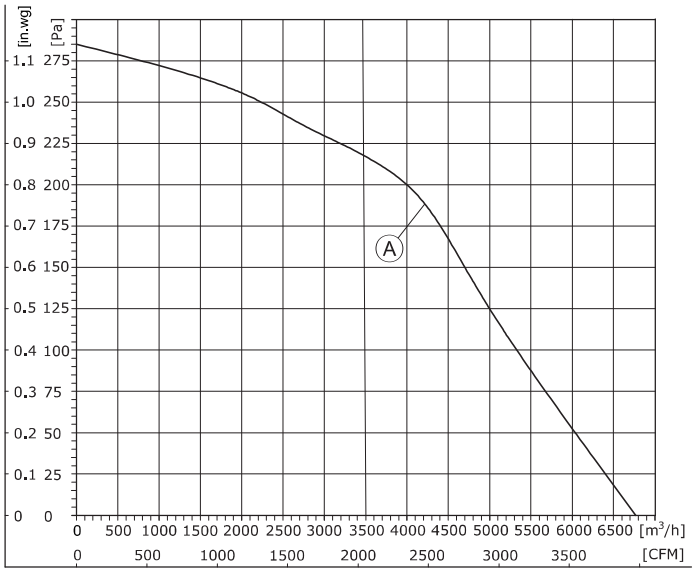

1、Air performance measured according to: ISO 5801, with DJ inlet ring without contact protection.
2、Intake-side sound level: LpA measured at 1 m distance from fan axis. The values given are only applicable under the specifi ed measuring conditions and may differ depending on the installation conditions.

EC Axial Fans D500

– 旋转方向**Direction of rotation:** 反转，从转子方向Anti-clockwise，viewed toward rotor
– 技术特性**Technical features:** 参见附图See connection diagram
– 泄漏电流**Touch curren:** < 3,5 mA
– 能效**Efficiency:** ErP2015
– 标准/证书**Valid For Approval/Standard**：CE,RoHS,ISO9001
环境温度**Perm. ambient temp.**：.-25℃~+60℃
– 安装**Mounting:** 免维护滚珠轴承Maintenance-free ball bearings

噪音等级 **Sound Pressure Level**	风量 **Air Flow**	风压 **Air Pressure**		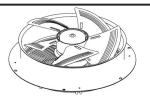	速度控制 **Speed Control**	接线图 **Wiring Mode**
dB(A)	m³/h	Pa	with guard grille	with wall ring		
71	6781	285	FG3G500-2APL-20	FW3G500-2APF-20	0-10VDC PWM RS-485	F3,F5
74	8750	250	FG3G500-2APL-30	FW3G500-2APF-30		F7
78.4	10400	300	FG3G500-4APL-31	FW3G500-4APF-31		F8

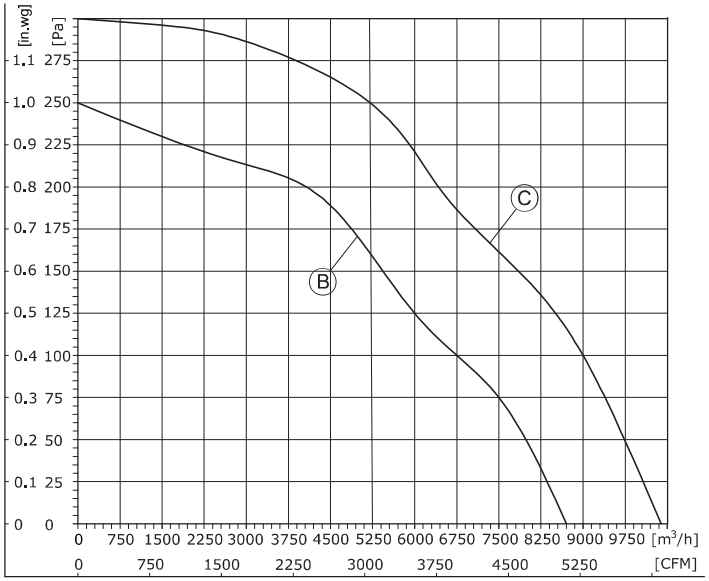

1、Air performance measured according to: ISO 5801, with DJ inlet ring without contact protection.
2、Intake-side sound level: LpA measured at 1 m distance from fan axis. The values given are only applicable under the specifi ed measuring conditions and may differ depending on the installation conditions.

(轴流风机Axial Fan)
FG3G500-2APN-20

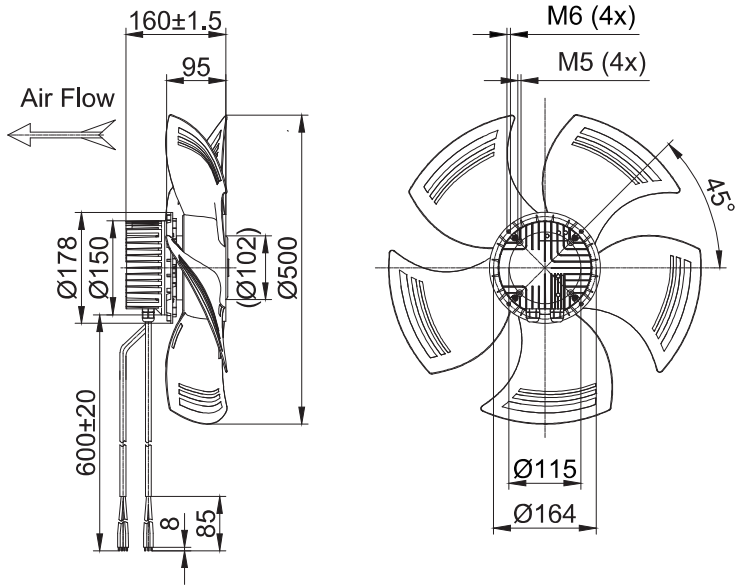

(带网罩的轴流风机Axial Fan With Guard Grille)
FG3G500-2APL-20

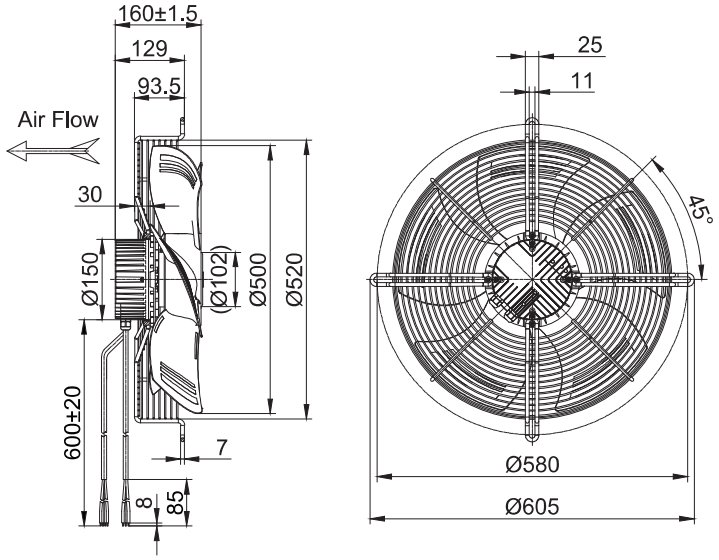

(带导风筒的轴流风机Axial Fan With Wall Ring)
FW3G500-2APF-20

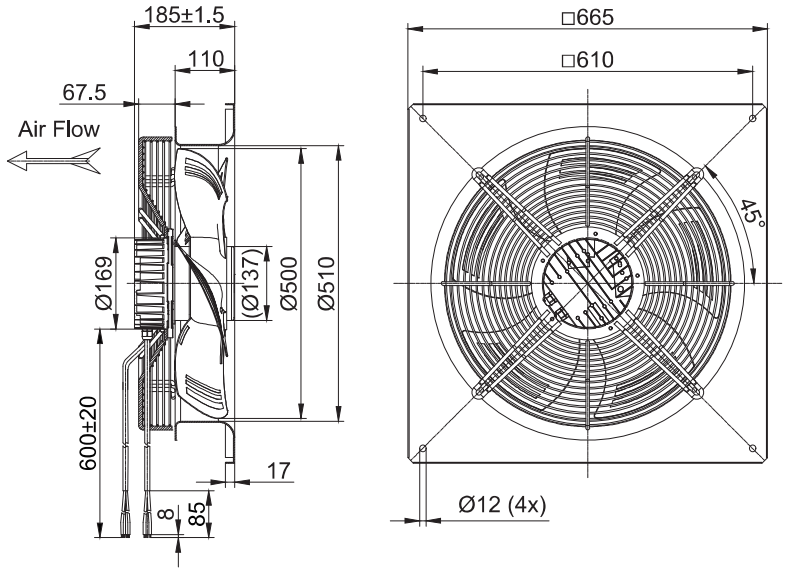

(轴流风机Axial Fan)
FG3G500-2APN-30

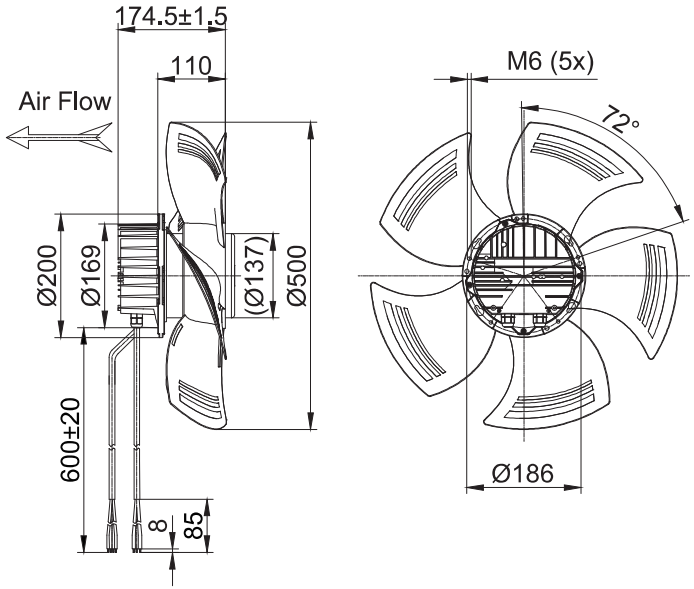

(带网罩的轴流风机Axial Fan With Guard Grille)
FG3G500-2APL-30

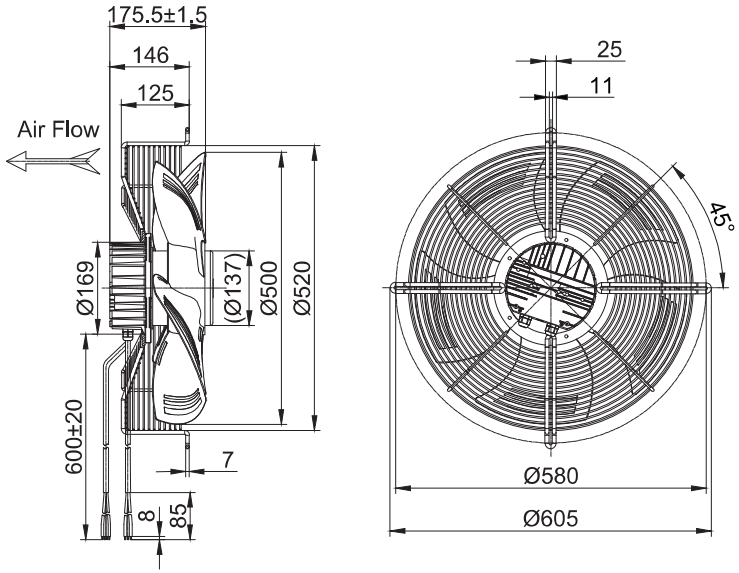

(带导风筒的轴流风机Axial Fan With Wall Ring)
FW3G500-2APF-30

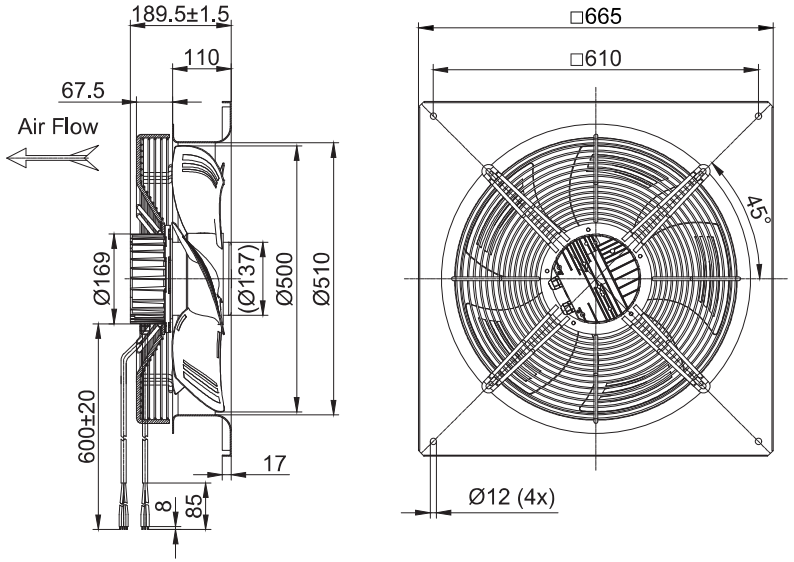

(轴流风机Axial Fan)
FG3G500-4APN-31

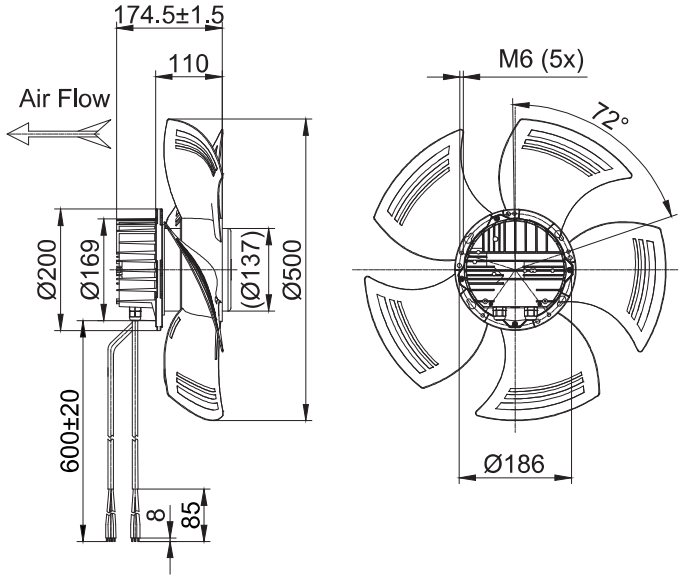

(带网罩的轴流风机Axial Fan With Guard Grille)
FG3G500-4APL-31

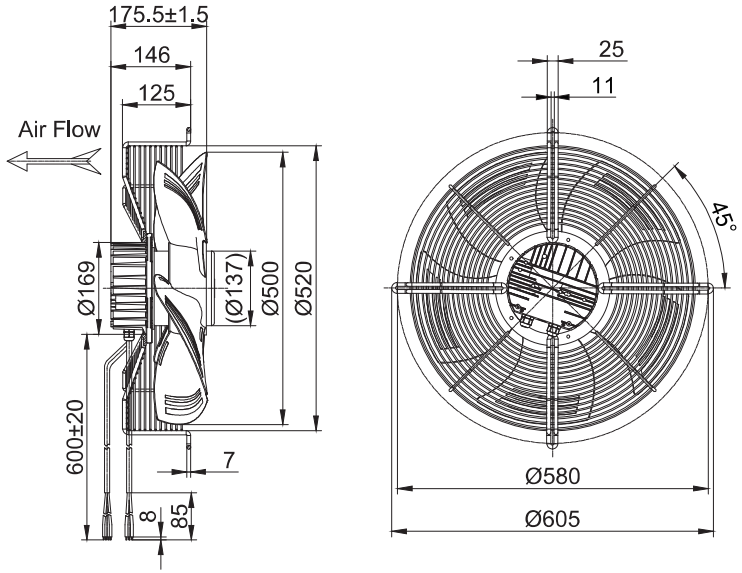

(带导风筒的轴流风机Axial Fan With Wall Ring)
FW3G500-4APF-31

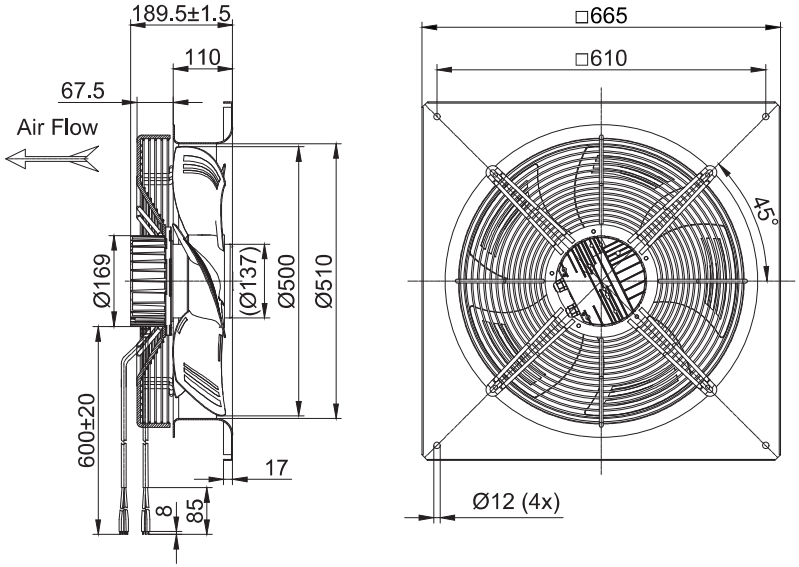



EC Axial Fans D630

- 材料**Material:** 塑料
  风轮**Impeller:** Plastic
  转子 Rotor: 电泳Electrophoresis
  端盖 Electronics housing: 压铸铝Die-cast aluminium
- 叶片数量**Number of blades:** 5
- 防护等级**Degree of protection:** IP 54
- 绝缘等级**Insulation class:** F
- 安装位置**Installation position:** 任意Any
- 模式**Mode:**连续工作制 Continuous operation (S1)

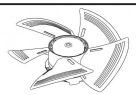	电机 **Motor**	曲线 **Curve**	额定电压 **Nominal Voltage**	额定电压范围 **Nominal Voltage Range**	频率 **Frequency**	电流 **Current**	转速 **Speed**	输入功率 **Max. input Power**
Type			VAC	VAC	Hz	A	RPM	W
FG3G630-4APN-31	BLEC137	Ⓐ	380	304~456	50/60	1.3	1150	800

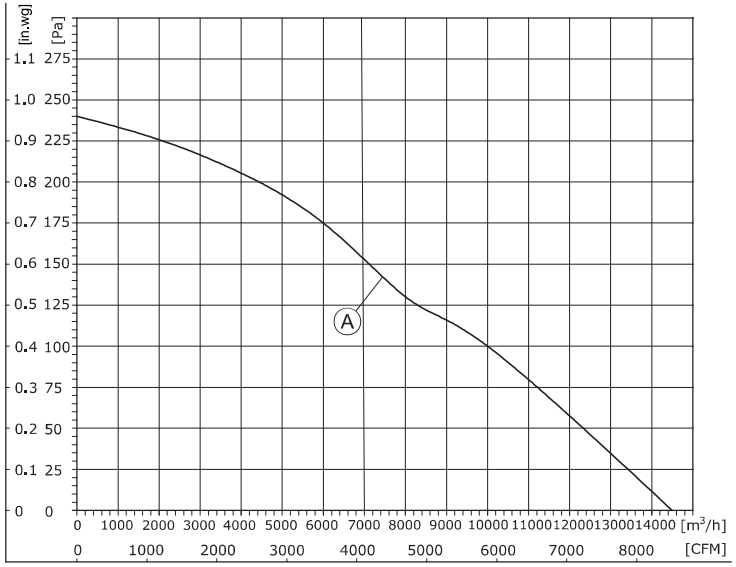

1、Air performance measured according to: ISO 5801, with DJ inlet ring without contact protection.
2、Intake-side sound level: LpA measured at 1 m distance from fan axis. The values given are only applicable under the specifi ed measuring conditions and may differ depending on the installation conditions.

EC Axial Fans D630

- 旋转方向**Direction of rotation:** 反转，从转子方向Anti-clockwise，viewed toward rotor
- 技术特性**Technical features:** 参见附图See connection diagram
- 泄漏电流**Touch curren:** < 3,5 mA
- 能效**Efficiency:** ErP2015
- 标准/证书**Valid For Approval/Standard**：CE,RoHS,ISO9001
  环境温度**Perm. ambient temp.**：.-25℃~+60℃
- 安装**Mounting:** 免维护滚珠轴承Maintenance-free ball bearings

噪音等级 **Sound Pressure Level**	风量 **Air Flow**	风压 **Air Pressure**		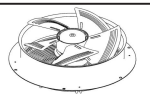	速度控制 **Speed Control**	接线图 **Wiring Mode**
dB(A)	m³/h	Pa	with guard grille	with wall ring		
69	14500	240	FG3G630-4APL-31	FW3G630-4APF-31	0-10VDC PWM RS-485	F8

(轴流风机Axial Fan)
FG3G630-4APN-31

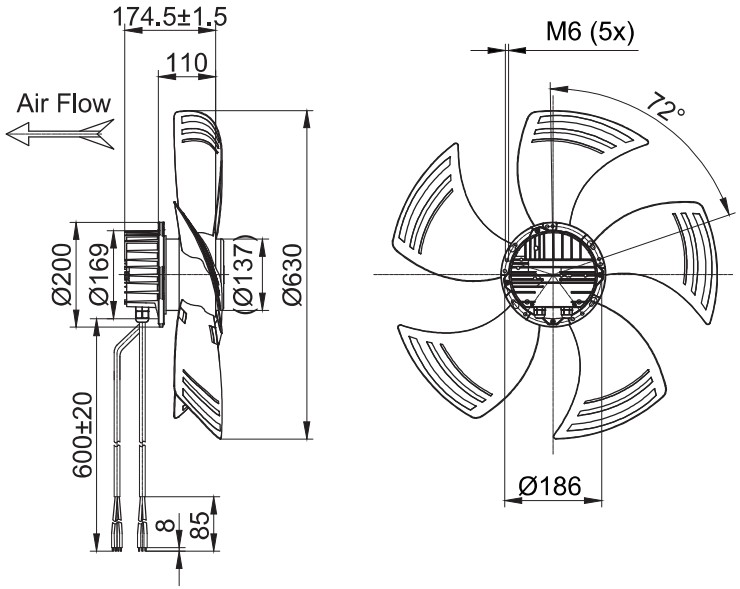

(带网罩的轴流风机Axial Fan With Guard Grille)
FG3G630-4APL-31

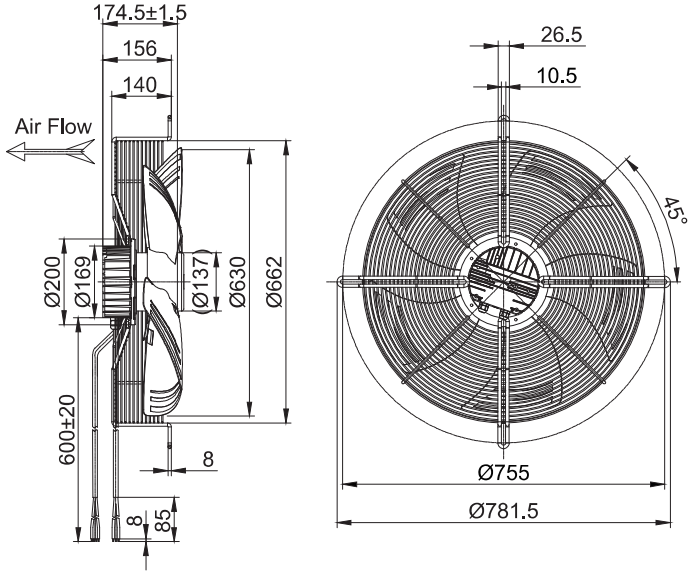

(带导风筒的轴流风机Axial Fan With Wall Ring)
FW3G630-4APF-31

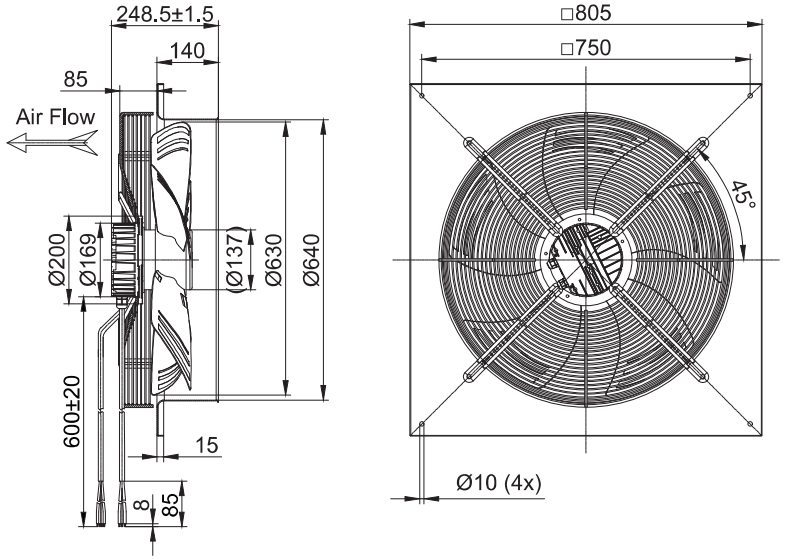








流动的清新，尽享效率之美

A Moveable Freshness

Enjoying The Beauty Of Efficiency To The Fullest

FANOVA

苏州鑫恒鑫电机有限公司

Fanova(Suzhou) Motor Technology Co., LTD

地址/ADD：中国江苏省苏州市相城经济开发区富元路739号7号楼2楼，邮编：215100

2ND FLOOR BUILDING7,NO.739.FUYUAN ROAD ECONOMIC DEVELOPMENT ZONE XIANGCHENG DISTRICT,SUZHOU CITY,JIANGSU PROVINCE,PR.CHINA

电话/TEL：+86 - 512 - 66152110

邮箱/E-MAIL：sales01 @fanova-tech.com 网址/Website：www.fanova-tech.com